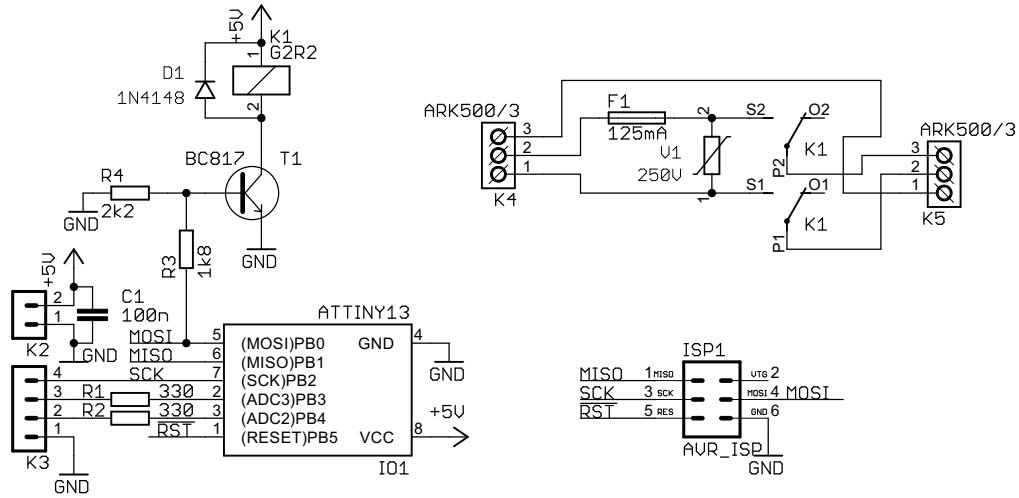

(c) Jaroslav Dohnal 2014

Relay Module

HD USB Sound Card

relay board

10. 3. 2014 21:22:31

Sheet: 1/1